2638-93
A 11/27/06

24" R/W RTS Spur Gear MJ x Flange
General Dimensions

CLOW VALVE COMPANY
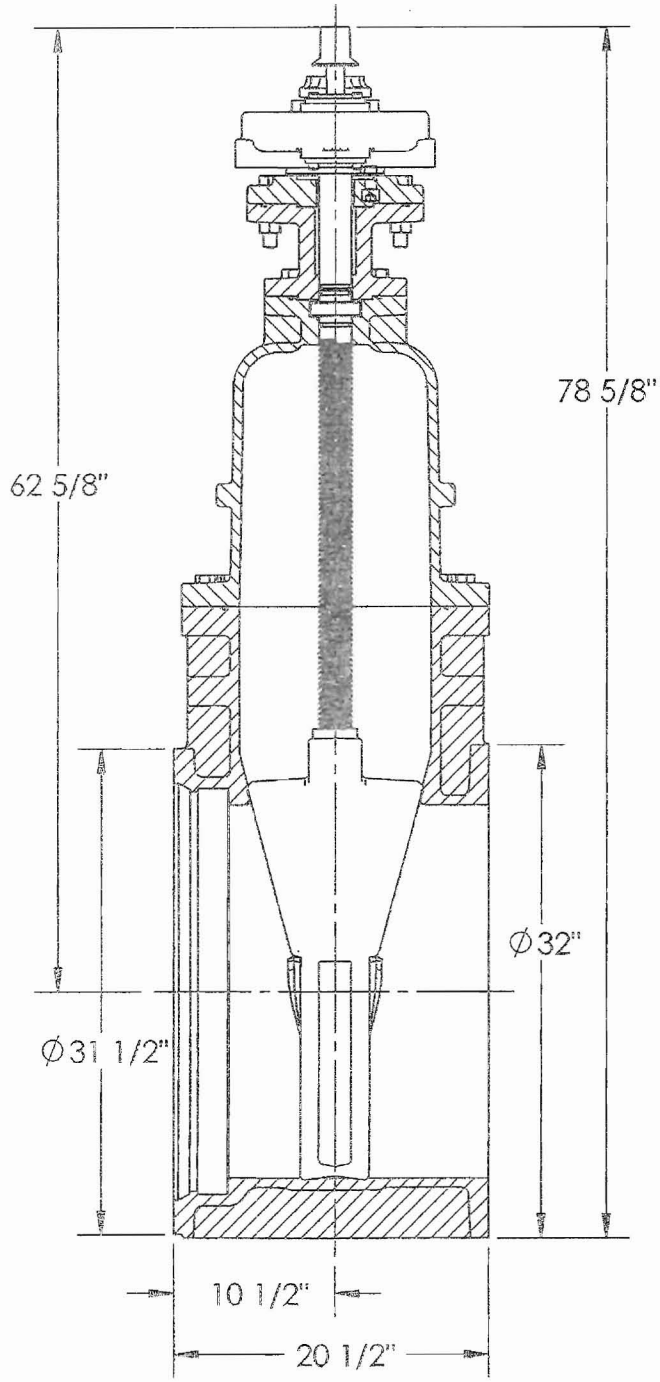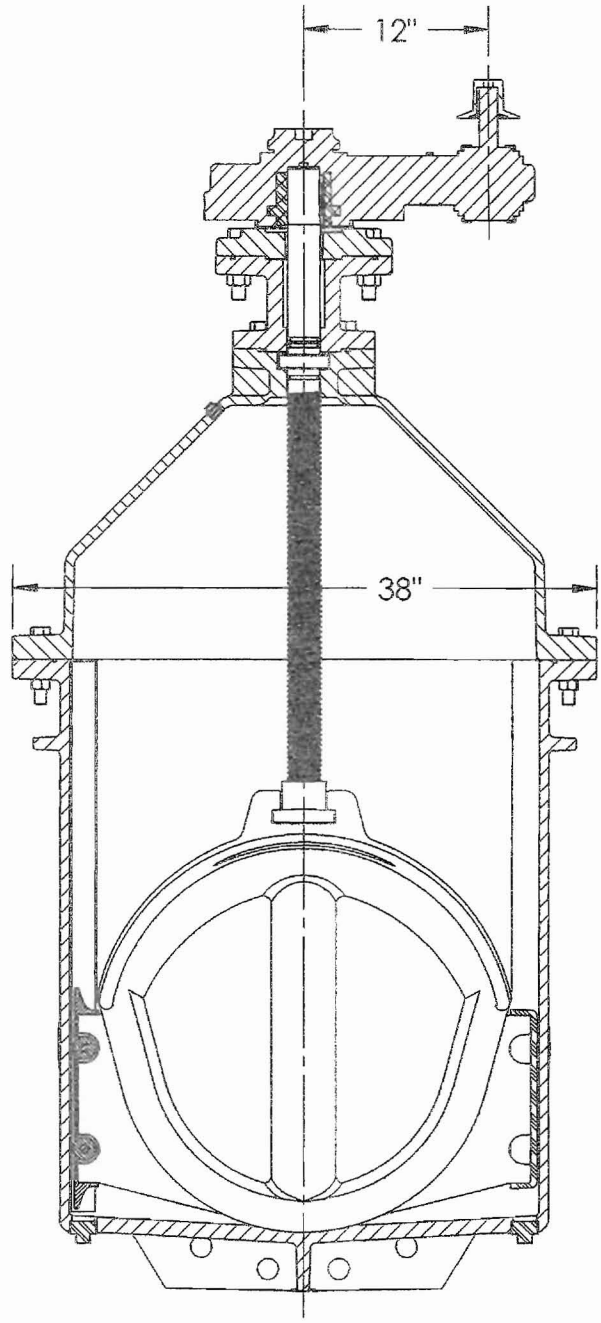
MODEL 2638