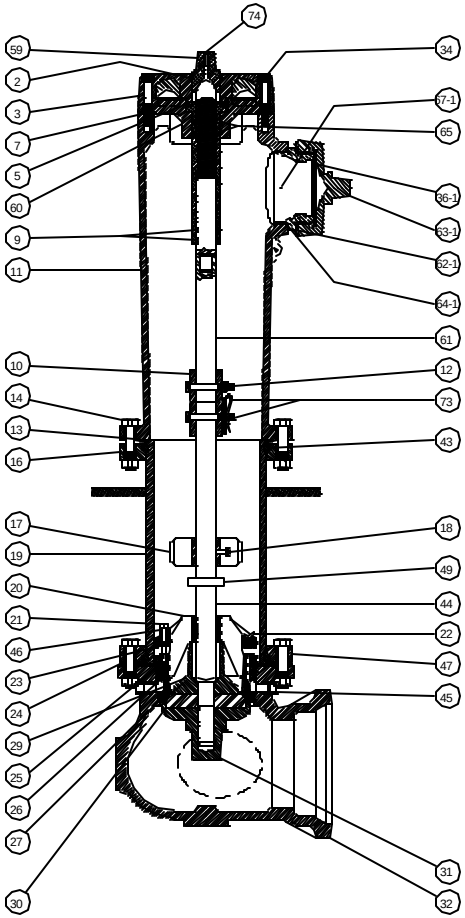

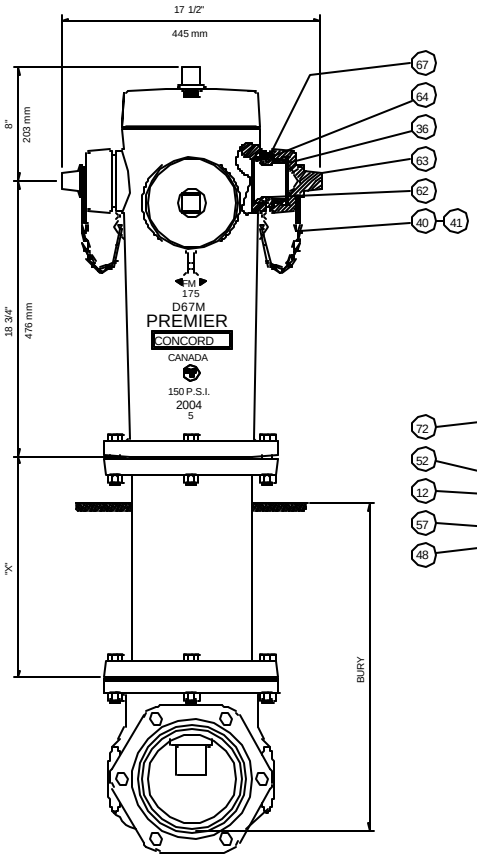

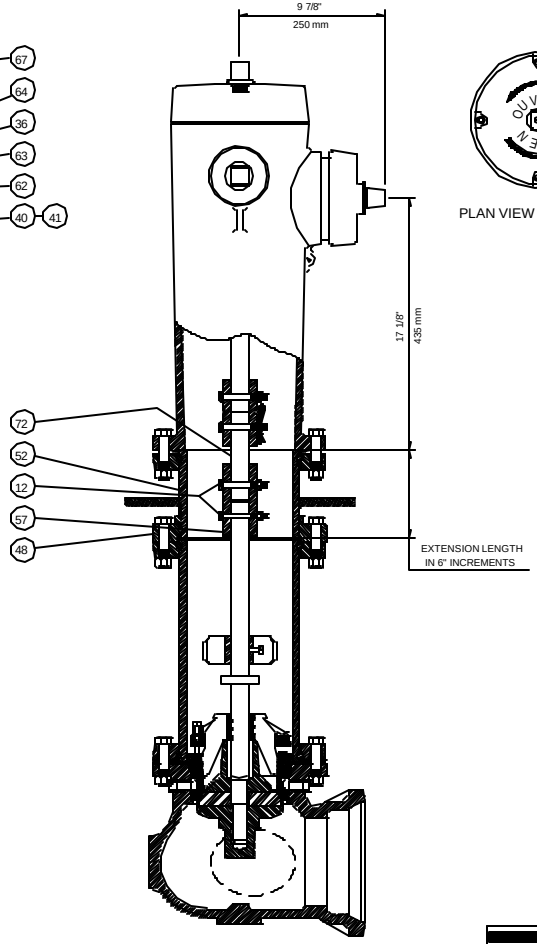

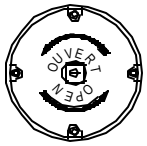

PLAN VIEW OF BONNET

DIMENSION "X" IS 8 3/4", (222 mm)
LESS THAN BURY REQUIRED

D-1569 REV. H OCT. 2000 DWG DATE NOV. 1995

MVC 1310
OCT. 2000
L.M.

D67M-P PREMIER HYDRANT
ASSEMBLY DRAWING

CLOW CANADA

DRAWING No. D-1569